Paper

A New Multifunctional Sensor for Measuring Concentrations of Ternary Solution

Guo Wei* Non-member
Katsunori Shida* Member

This paper presents a multifunctional sensor with novel structure, which is capable of directly sensing temperature and two physical parameters of solutions, namely ultrasonic velocity and conductivity. By combined measurement of these three measurable parameters, the concentrations of various components in a ternary solution can be simultaneously determined. The structure and operation principle of the sensor are described, and a regression algorithm based on natural cubic spline interpolation and the least square method is adopted to estimate the concentrations. The performances of the proposed sensor are experimentally tested by the use of ternary aqueous solution of sodium chloride and sucrose, which is widely involved in food and beverage industries. This sensor could prove valuable as a process control sensor in industry fields.

Keywords : multifunctional sensor, concentration, ternary solution, ultrasonic velocity, conductivity.

1. Introduction

To guarantee a high product quality, concentration measurement of solution is in high demand in various industry fields and means a great deal in production process control. Among various analytical techniques, both ultrasonic sensor and conductivity sensor have been intensively studied due to the major advantage that they can be used in online process control[(1)~(5)].

The conventional approach for measuring the concentrations of various components in multi-component solutions mostly involved in industrial manufacturing processes is to use the required number of dedicated stand-alone sensors. For example, the commercially available ternary concentration analyzer, which consists of a single ultrasonic sensor and a single electrode-less conductivity sensor, has been widely applied in various industry fields[(6)]. This kind of sensing method, however, lacks the multifunctional sensing characteristics.

In contrast, in the cases two or more parameters have to be sensed, the multifunctional sensing method has generated great interests among researchers in the recent past for its advantages of compactness, low production cost and easy signal processing compared to the conventional methods. Several multifunctional sensors for sensing multi-parameters of liquids have been successfully developed[(7)~(9)].

This study presents a single multifunctional sensor with novel structure, which is capable of directly sensing temperature and two physical parameters of solutions, namely ultrasonic velocity and conductivity. By combined measurement of these three measurable parameters, the concentrations of various components in a ternary solution can be simultaneously determined. The structure and operation principle of the sensor are described. A regression algorithm, which combines natural cubic spline interpolation with the least square method, was adopted to estimate the concentrations. The sensor was examed by simultaneously measuring the concentrations of sodium chloride (NaCl) and sucrose in their ternary aqueous solutions and the results were satisfactory. NaCl and sucrose were chosen as the objective substances because of their wide usages in food and beverage industries. For example, NaCl and sucrose are the most commonly used substances in osmotic dehydration processes[(10)], NaCl and sugar are also the main ingredients in sports drinks[(11)].

* Department of Electrical and Electronic Engineering, Faculty of Science and Engineering, Saga University.
1 Honjo-machi, Saga 840-8502

2. Sensor Structure and Operation Principle

Fig. 1 shows the mechanical structure of the multifunctional sensor. This sensor has the functions of ultrasonic velocity sensing, conductivity sensing and temperature sensing. As discussed later, the concentrations of various components in a ternary solution are indirectly available from this sensor.

2.1 Ultrasonic Velocity Sensing As shown in Fig. 1, the part with ultrasonic velocity sensing function is an ultrasonic sensor, which works in reflection mode and consists of a

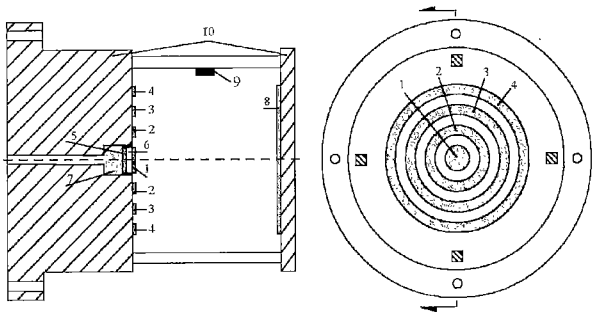

1: Silver electrode (Current electrode I); 2: Potential electrode I; 3: Potential electrode II; 4: Current electrode II; 5: Silver electrode; 6: Piezoelectric ceramics; 7: Acoustic absorption material; 8: Reflector plate; 9: Thermistor; 10: Acrylic resin substrates

Fig. 1. Structure of the designed multifunctional sensor.

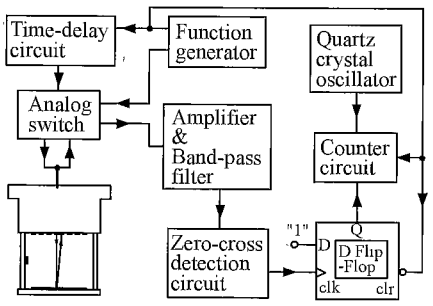

Fig. 2. Block diagram of measuring the time of flight.

piezoelectric ceramics (2 MHz centre frequency) and a reflector plate. A piezoelectric ceramics with a smaller diameter of 5 mm was selected for the compactness, and the distance d between the piezoelectric ceramics and reflector plate is about 30 mm. One side of the acrylic resin substrate was coated by the stainless steel as a reflector plate for increased reflection coefficient and better anti-corrosion ability.

The pulse-echo technique is by far the most widely used for determining ultrasonic measurement because it is easy to operate, the measurement is rapid and non-invasive, and the technique can be easily automated. As given in Fig. 2, the function generator produces a train of electrical spikes (2 MHz, 10 V_{pp} and 5 cycles), which excite the transducer to emit a pulse of ultrasound wave. The ultrasonic pulse travels through a sample solution and is partly reflected from the reflector plate. The reflected ultrasonic pulse returns to the transducer where it is detected. The electronics record the time of flight (TOF) t taken for the pulse to travel twice the distance d. The ultrasonic velocity c is calculated by: $c=2d/t$.

The ultrasonic velocity in distilled water is well known and can be used to accurately determine the distance d in the sensor.

2.2 Conductivity Sensing As shown in Fig. 1, the part with conductivity sensing function is a 4-electrode conductivity sensor with one pair of electrodes as current ones and another pair of electrodes as potential ones. Here, the feature of the multifunctional sensor is that one silver electrode being sintered to the piezoelectric ceramics also acts as one electrode of the conductivity sensor. This design enables the smooth combination of the conductivity sensing function with the ultrasonic velocity sensing function and makes the sensor compact in structure. The other three ring electrodes were made of stainless steel plate for their stability and high anti-corrosion ability. The width of each ring electrode and the gap between adjacent electrodes are 2 mm, respectively.

In general, a 4-electrode conductivity sensor offers higher spacial resolution compared to an electrode-less conductivity sensor. In order to prevent polarization, electrochemical reactions and corrosion at the interface between the electrode surface and the surrounding solution, applying alternating voltage or current excitation is preferred for continuous monitoring.

Fig.3 shows the electrical model of the 4-electrode measurement setup. Two potential electrodes are coupled to the inverting inputs of two JFET input operational amplifiers, respectively. Thus, a fixed potential with the same value as the alternating reference voltage V_r of frequency 1 kHz is established between the two potential electrodes. Because the impedance in the voltage circuit is much higher than the interface impedance

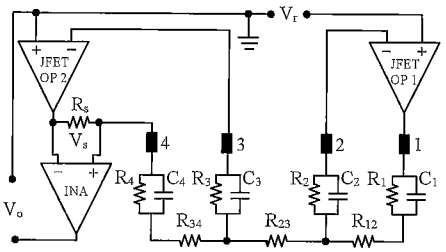

1: Current electrode I ; 2: Potential electrode I ; 3: Potential electrode II ; 4: Current electrode II ; R_{12}, R_{23} and R_{34}: Solution resistances; R_1~R_4 and C_1~C_4: Interface impedances between electrode surfaces and surrounding solution; V_r: Alternating reference voltage of frequency 1 kHz; R_s: Precision resistor; V_o: Output voltage of conductivity sensor

Fig. 3. Electrical model of the 4-electrode measurement setup.

between the electrode surface and the solution, the current between two current electrodes is primarily related to the solution resistance between two potential electrodes. Here, the current is measured as a voltage signal V_s across a precision resistor R_s. Thus, the output voltage V_o remains directly proportional to the conductivity of the solution in which the electrodes are immersed, regardless of fouling of the electrodes by solution impurities and electrolysis effects.

The calibration of conductivity measurement in a wide range of temperature can be carried out by using KCl solutions of known concentration as reference[2].

2.3 Temperature Sensing Temperature measurement is extremely important because ultrasonic velocity and conductivity are always dependent on the temperature of the solution being measured. So a small thermistor chip was built in the middle part of the sensor to monitor the temperature of the solution with an accuracy of 0.1℃.

2.4 Combination Measurement for Determining Concentrations of Ternary Solution The basic principle for determining the concentrations of various components in the ternary solution by combined measurement of ultrasonic velocity, conductivity and temperature is that significant changes in the ultrasonic velocity and conductivity will be stimulated as the concentration of each component and the temperature of solution vary. The greater the magnitude of the changes, the more accurately the concentrations can be determined.

Although the outputs of exact ultrasonic velocity and conductivity may benefit from the fact that these parameters are intrinsic properties of the solution and independent of the sensor itself, the calibration and standardization of the sensor are time consuming and costing. Moreover, in the case for determining the concentrations of a ternary solution, only relative changes are concerned (rather than absolute values). Hence, the sensor was operated in such a way that the TOF t and the output voltage V_o were directly calibrated by a series of solutions with known concentrations of NaCl and sucrose and then correlated to the NaCl concentration and sucrose concentration. This calibration protocol simplifies the data processing and also offers more accurate measurement of concentrations.

In the present study, the TOF t and output voltage V_o could be measured with the accuracies of 0.1% and 0.2%, respectively.

3. Experimental Results and Discussion

All experiments were carried out within an incubator, in which the temperature can be controlled from −10 to 60℃ with the resolution of ±0.1℃. The experimental setup is shown in Fig. 4. The multifunctional sensor was switched to the TOF measurement circuit and the 4-electrode measurement circuit in sequence, giving the TOF t and output voltage V_o, respectively. The data was then sent to a computer through GPIB interface for data processing.

3.1 Static Calibration Process Various standard ternary aqueous solutions with particular NaCl concentrations of 1 ~ 4 wt% and sucrose concentrations of 2 ~ 8 wt% were prepared in mass percentage and measured at temperatures ranging from 10 to 30℃ in steps of 5℃. Distilled water was used exclusively in all solutions.

3.1.1 Temperature Dependences Fig. 5 shows temperature dependence of the TOF for ternary aqueous solutions of NaCl and sucrose. For all sample solutions, the TOF t decreases non-linearly with the increasing temperature in the range 10 ~ 30℃. By fitting a first-order polynomial to the experimental data, the temperature coefficients are found to vary from 0.058 to 0.077 μs/℃ for various calibration sample solutions.

Fig. 6 shows temperature dependence of the output voltage for ternary aqueous solutions of NaCl and sucrose. For all sample solutions, the output voltage V_o, which is directly proportional to the conductivity, increases linearly with the increasing temperature in the range 10 ~ 30℃. The temperature coefficients are from 17.1 to 63.9 mV/℃.

3.1.2 Sensitivity of the Proposed Sensor As a multifunctional sensor, the sensitivity of one quantity is influenced by the value of other quantities. Therefore, the sensitivity is discussed under specified conditions.

When NaCl concentration is fixed, the TOF t decreases with increasing the sucrose concentration. The sensitivities of TOF t to sucrose concentration are around 98 ns/1wt% in the cases of a temperature of 10℃ and respective NaCl concentration of 1, 2, 3 and 4 wt%. When sucrose concentration is fixed, the TOF t also decreases with increasing the NaCl concentration. The sensitivities of TOF t to NaCl concentration are around 344 ns/1wt% in the cases of a temperature of 10℃ and respective sucrose concentration of 2, 4, 6 and 8 wt%. It is then clear that the sensitivity to NaCl concentration is about 3.5 times bigger than that to sucrose concentration. The ultrasonic velocity c is related to the density ρ and the adiabatic compressibility β of a liquid in the form: $1/c^2=\rho\beta$, and both ρ and β are species sensitive. The above phenomenon could be explained in terms of difference in stereochemistry of the NaCl molecule and sucrose molecule, and the way they fit into the structure of water.

On the other hand, when sucrose concentration is fixed, the output voltage V_o linearly increases with increasing the NaCl concentration. The sensitivities of output voltage V_o to NaCl concentration are from 509 to 570 mV/1wt% in the cases of a temperature of 10℃ and respective sucrose concentration of 2, 4, 6 and 8 wt%. This is thought to be reasonable since the ionic Na^+ and Cl^- give conductivity to the solution. Interestingly, when NaCl concentration is fixed, the output voltage V_o linearly decreases with increasing the sucrose concentration. The sensitivities of output voltage V_o to sucrose concentration are from 11 to 42 mV/1wt% in the cases of a temperature of 10℃ and respective NaCl concentration of 1, 2, 3 and 4 wt%. This phenomenon could be explained as follows. The increased sucrose concentration improves viscosity and lowers the dielectric constant. Meanwhile, the viscosity and dielectric constant of the solution highly influence the conductivity properties of an electrolyte solution: low viscosities favor mobility of ions thus improving conductivity, low values of dielectric constant result in high association ratios of ions thus lowering ionic content and electrical conductivity[2].

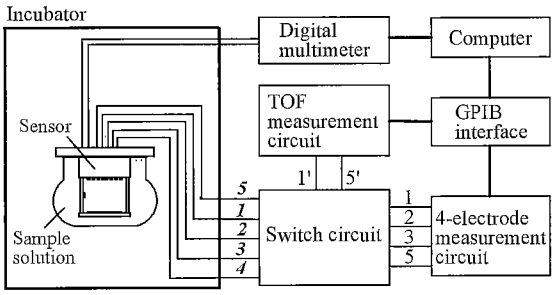

Fig. 4. Experimental setup.

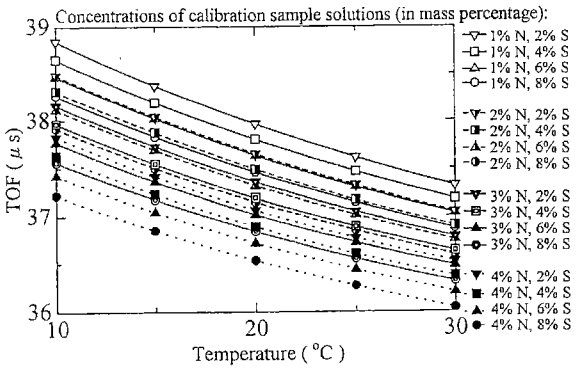

Fig. 5. Temperature dependence of the TOF for ternary aqueous solutions of NaCl and sucrose.

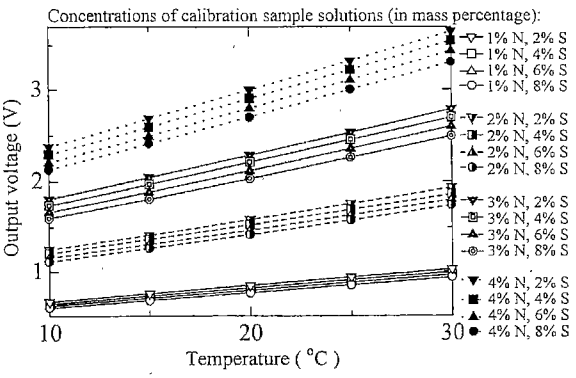

Fig. 6. Temperature dependence of the output voltage for ternary aqueous solutions of NaCl and sucrose.

3.2 Measurement Process After finishing calibration process, the sensor is ready for measurements of sample solutions with unknown concentrations. The key to a successful measurement is to select a suitable and efficient regression algorithm for estimating the concentrations of NaCl and sucrose

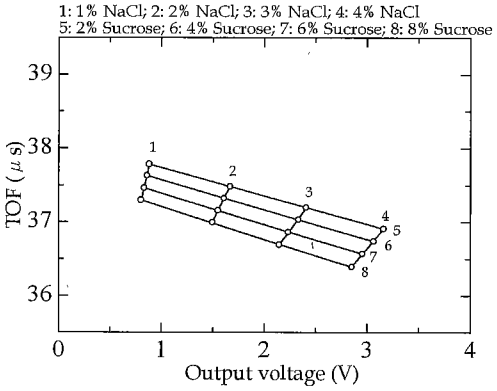

Fig. 7. Relationship between sample solution concentrations and sensor outputs at 22.5℃.

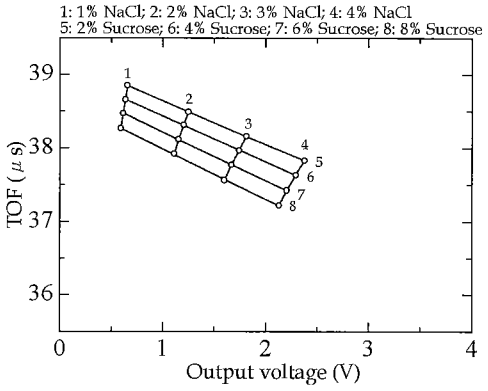

Fig. 8. Relationship between sample solution concentrations and sensor outputs at 10℃.

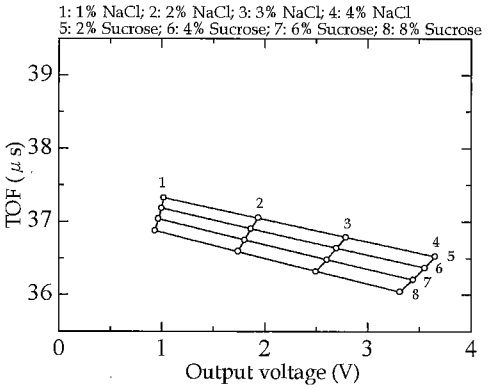

Fig. 9. Relationship between sample solution concentrations and sensor outputs at 30℃.

from the sensor outputs, namely, TOF t, output voltage V_o and temperature T_x.

In the present study, a regression algorithm based on natural cubic spline interpolation and the least square method was developed. At first, a dynamic calibration curve at temperature T_x was constructed by natural cubic spline interpolation. Finally, the relationship between solution concentrations and sensor outputs at temperature T_x was established by means of the least square method.

3.2.1 Construction of Dynamic Calibration Curve As widely known, data obtained from measurements are better represented over the entire range by a set of piecewise continuous curves rather than by a single curve. Cubic spline interpolation is the most common one of piecewise polynomial interpolations due to its smooth peculiarity and high accuracy.

The natural cubic spline interpolation function linking the data points (x_k, y_k) and (x_{k+1}, y_{k+1}) has the form:

$$s_k(x) = s_{k,0} + s_{k,1}(x - x_k) + s_{k,2}(x - x_k)^2 + s_{k,3}(x - x_k)^3,$$
$$x \in (x_k, x_{k+1}),\ k = [0,1,\ldots,n-1].$$

Where,

$$s_{k,0} = y_k,$$
$$s_{k,1} = d_k - h_k(2m_k + m_{k+1})/6,$$
$$s_{k,2} = m_k/2,$$
$$s_{k,3} = (m_{k+1} - m_k)/(6h_k),$$
$$h_k = x_{k+1} - x_k,$$
$$d_k = (y_{k+1} - y_k)/(x_{k+1} - x_k),$$
$$m_k = s''(x_k).$$

Here, m_k can be solved by:

$$\rho_k m_{k-1} + 2m_k + \lambda_k m_{k+1} = 6\frac{d_k - d_{k-1}}{h_k + h_{k-1}},\ k = [1,\ldots,n-1].$$

Where,

$$\lambda_k = h_k/(h_k + h_{k-1}),$$
$$\rho_k = h_{k-1}/(h_k + h_{k-1}),$$
$$m_0 = m_n = 0.$$

Hence, by nature cubic spline interpolation described above, a dynamic calibration curve at any given temperature T_x could be constructed from the previously established calibration curves at calibration temperatures of 10, 15, 20, 25 and 30℃. Thus the temperature influence is considered at the same time. Fig. 7 shows a dynamic calibration curve at temperature T_x of 22.5℃. For comparison, the calibration curves at calibration temperatures of 10℃ and 30℃ are shown in Figs. 8 and 9, respectively.

3.2.2 Estimation of Concentrations Based on the dynamic calibration data, the relationship between solution concentrations and sensor outputs could be established by means of the least square method with two variables.

At any given temperature T_x, TOF t and output voltage V_o are only functions of NaCl concentration (D_N) and sucrose concentration (D_S):

$$t = f_1(D_N, D_S), \quad \cdots\cdots (1)$$

$$V_o = f_2(D_N, D_S). \quad \cdots\cdots (2)$$

Then the above equations are solved to find D_N and D_S:

$$D_N = g_1(t, V_o), \quad \cdots\cdots (3)$$

$$D_S = g_2(t, V_o). \quad \cdots\cdots (4)$$

Eqs. (3) and (4) can be approximately expressed by polynomials:

$$D_N = a_1 + a_2V_o + a_3t + a_4V_o^2 + a_5t^2 + a_6V_ot + a_7V_o^3 + a_8t^3 + a_9V_o^2t + a_{10}V_ot^2, \quad \cdots\cdots (5)$$

Table 1. Estimation results.

Solution Temperature (℃)	Actual concentrations		Found concentrations and errors			
	NaCl (wt%)	Sucrose (wt%)	NaCl (wt%)	Errors (wt%)	Sucrose (wt%)	Errors (wt%)
12 5	1 50	5.00	1.48	0.02	5.15	0.15
17.5	1 50	5.00	1.47	0.03	5.11	0.11
22.5	1.50	5.00	1.47	0.03	5.09	0.09
27.5	1 50	5.00	1.47	0.03	5.12	0.12
12.5	2 50	5.00	2.47	0.03	5.07	0 07
17.5	2.50	5 00	2.47	0.03	5.07	0.07
22.5	2.50	5.00	2.47	0.03	5.06	0.06
27.5	2 50	5.00	2.47	0.03	5.09	0.09

$$D_S = b_1 + b_2V_o + b_3t + b_4V_o^2 + b_5t^2 + b_6V_ot + b_7V_o^3 + b_8t^3 + b_9V_o^2t + b_{10}V_ot^2 \quad \cdots\cdots (6)$$

Introducing the dynamic calibration data $\{D_N;\ t;\ V_o\}$ and $\{D_S;\ t;\ V_o\}$ at temperature T_x into Eqs. (5) and (6), one gets two linear overdetermined equation sets.

A least squares approximate solution of linear equations set $y=Ax$ is to find the optimized $x=x_{ls}$ which minimizes $r=\|Ax-y\|$. In general, matrix $A\in R^{m\times n}$ coming from experimental data is skinny and full rank, i.e., $m>n$ and $rank(A)=n$, thus $y=Ax$ is called overdetermined set of linear equations (more equations than unknowns) with full rank. The unique least squares approximate solution $x_{ls}\subset R^n$ is given by:

$$x_{ls} = pinv(A) * y \quad \cdots\cdots (7)$$

Where, $pinv(A)$, the pseudo-inverse of A, can be obtained by means of matrix singular value decomposition (SVD).

Using Eq. (7), one can get coefficient vectors $\boldsymbol{a}$ and $\boldsymbol{b}$ in Eqs. (5) and (6), respectively. The coefficient vectors $\boldsymbol{a}$ and $\boldsymbol{b}$ are characteristic parameters of the sensor and temperature dependent.

Thus, the NaCl concentration D_N and sucrose concentration D_S of an unknown sample solution are readily calculated by substituting the measured TOF and output voltage values into Eqs. (5) and (6).

3.2.3 Evaluation of the Sensor For calibration sample solutions at calibration temperatures, calculations using the regression algorithm mentioned above show that the maximum deviation from the calibration curve is not more than 0.01 wt% for NaCl concentration and 0.08 wt% for sucrose concentration, respectively.

The measurements of two sample solutions (1.5 wt% NaCl and 5 wt% sucrose, 2.5 wt% NaCl and 5 wt% sucrose) at four temperatures, 12.5, 17.5, 22.5 and 27.5℃, are given in Table 1. In which the error between each actual concentration and its found concentration is not more than 0.03 wt% for NaCl and 0.15 wt% for sucrose, respectively. It is clear that the accuracy of estimating NaCl concentration surpasses that of estimating sucrose concentration, and this corresponds to the sensitivity analysis mentioned in section 3.1.2 (the sensitivity of TOF t to NaCl concentration is bigger than that of TOF t to sucrose concentration, also is the case for output voltage V_o). The results here for sucrose is almost same as that give by N. I. Contrera[4].

Errors in Table 1 resulted from the stability of the sensor itself, the accuracy of the measurement circuits, and the temperature control performance of the incubator. The computation error also existed in the regression process. The error could be further restrained by improving the technological manufacture level of the sensor and the accuracy of measurement system.

4. Conclusion

A single multifunctional sensor, which has the functions of ultrasonic velocity sensing, conductivity sensing and temperature sensing, was developed to measure the concentrations of various components in their ternary solution. The experimental results highlighted the capability of the sensor in one of the expected applications to the ternary aqueous solution of NaCl and sucrose.

Besides the advantages of compactness in structure and low production cost, the other merits are that the developed sensor is not sensitive to the fouling of electrodes and the contaminant of the sensor can be easily and safely released without altering the geometry of the sensor due to the planar configuration of major sensing elements. The performance of the sensor could be further improved by pasting a stainless steel plate (SUS316) on the surface of piezoelectric ceramics for its extended applications to acid, alkali, saline solutions and suspensions. Like ultrasonic velocity, the acoustic impedance and attenuation coefficient may be further used as the measurable parameters for more information of solutions.

The proposed multifunctional sensor is easy to fabricate. Furthermore, incorporated with a matching circuit containing microprocessor, the sensor could easily be adapted for measurements on-line as well as off-line. It could prove valuable as an analytical instrument for use in a laboratory or as a process control sensor in a factory for monitoring solutions in tanks or flowing through pipes.

(Manuscript received September 10, 2002,
revised February 25, 2003)

References

(1) P. Hauptmann, N. Hoppe, and A. Püttmer . "Application of ultrasonic sensors in the process industry", *Meas. Sci. Technol.*, Vol. 13, pp. R73-R83 (2002)

(2) A. de Diego, A. Usobiaga, L. A. Fernández, and J M. Madariaga : "Application of electrical conductivity of concentrated electrolyte solutions to industrial process control and design from experimental measurement towards prediction through modeling", *Trends in Analytical Chemistry*, Vol. 20, pp. 65-78 (2001)

(3) D J. McClements . "Advances in the application of ultrasound in food analysis and processing", *Trends in Food Science & Technology*, Vol. 6, pp 293-299 (1995)

(4) N I. Contrera, P. Fairley, D. J McClements, and M. J. W. Povey . "Analysis of the sugar content of fruit juices and drinks using ultrasonic

velocity measurement", *Int. J. Food Sci. Technol.*, Vol. 27, pp 515-529 (1992)

(5) X. Y Li, H. Baba, and K. Kanayama : "Development of electrolyte solution concentration measurement system and application in solar pond", *Renewable Energy*, Vol. 23, pp. 195-206 (2001)

(6) Fuji Ultrasonic Engineering Co. Ltd. : "Ternary concentration analyzer", Available: www.fuji-us.co.jp/e/mer09/html

(7) A B. M. Ismail and K Shida . "Non-contact multisensing technique for precise measurement of concentration of electrolyte solution", *Sensors and Actuators*, Vol A69, pp 152-155 (1998)

(8) C. H. Wang, A. T Augoustic, J Mason, and N. D. McMillan : "The capacitive drop tensiometer-a novel multianalysing technique for measuring the properties of liquids", *Meas. Sci. Technol.*, Vol 10, pp. 19-24 (1999)

(9) D M. G. Preethichandra and K. Shida : "A multifunctional sensor for liquid characterization and identification", *Jpn. J. Appl. Phys.*, Vol. 40, pp. 1482-1486 (2001)

(10) F. Chenlo, R Moreira, G. Pereira, and A. Ampudia : "Viscosities of aqueous solutions of sucrose and sodium chloride of interest in osmotic dehydration processes", *Journal of Food Engineering*, Vol. 54, pp. 347-352 (2002)

(11) Available : http://www.gatorade.com cn/html/how/what.htm

Guo Wei

(Non-member) received his M.Sc. degree in Electrical Engineering from Harbin Institute of Technology (HIT), P.R. China in 1991. From 2000 up till now, he is a Ph.D. student in Dept. of E.E., Faculty of Sci. and Eng., Saga University. His main interests include sensor technology, instrumentation and signal processing.

Katsunori Shida

(Member) obtained his M.Sc. degree in Electrical Engineering from Tohoku University in 1970. In the same year he joined the Electro-technical Lab (ETL), Ministry of International Trade and Industry. After that, he received his Ph.D. degree. Since 1990 he has been a professor at Saga University and engaged in the research on intelligent precision electric measurement and instrumentation. He is an honorable member of many academic and professional societies in home and abroad.